Traditional Picket 60"

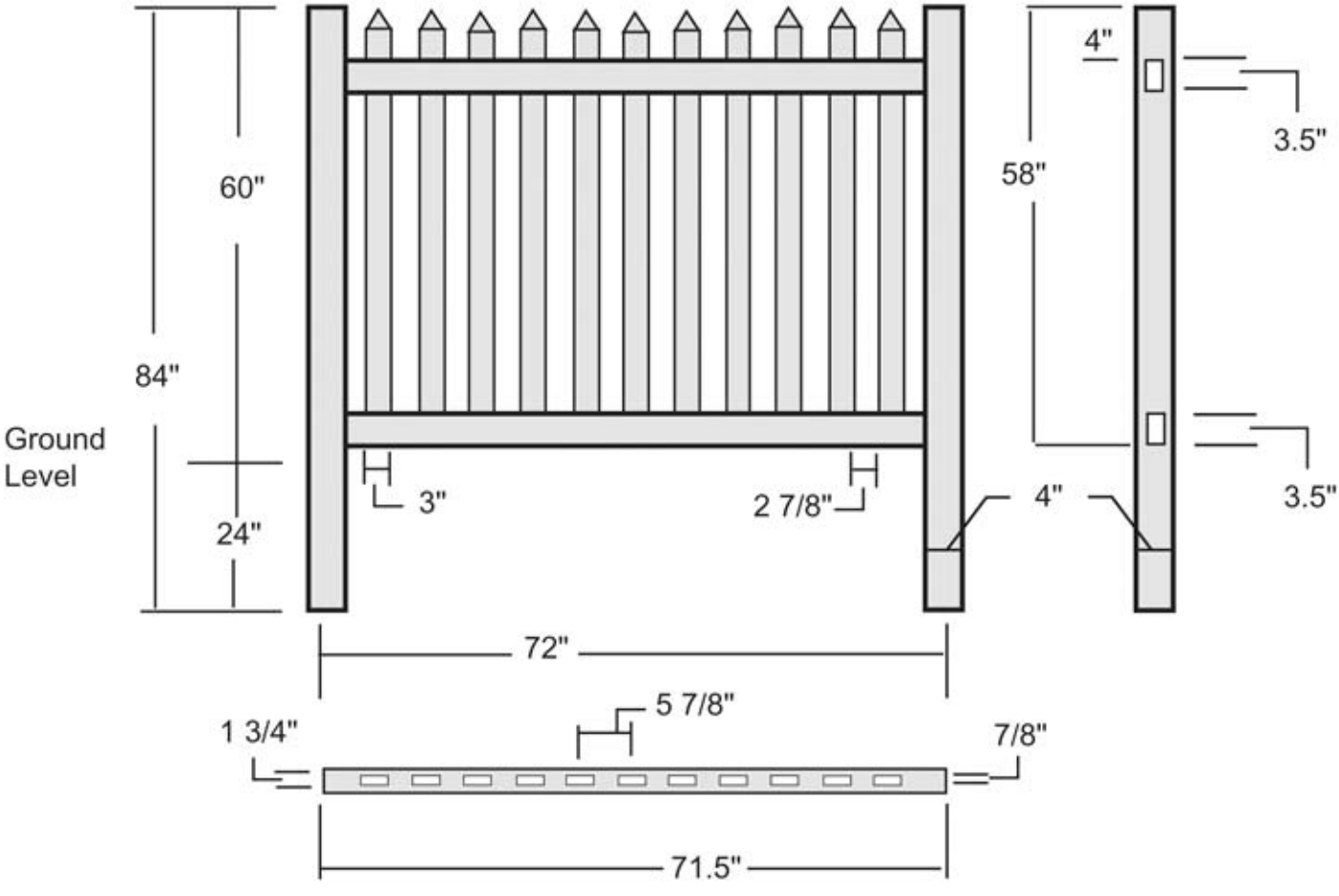

QTY	Description
11	7/8" x 3" x 56" pickets
2	1 3/4" x 3 1/2" x 71.5" rails
1	4" x 4" post
1	pyramid cap